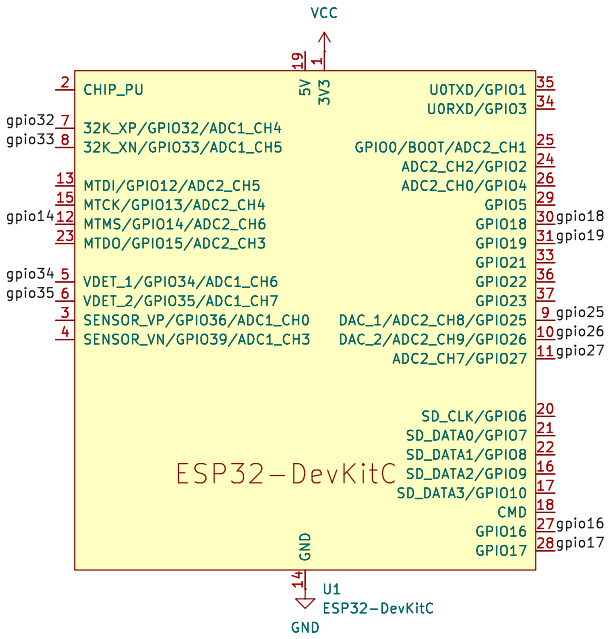

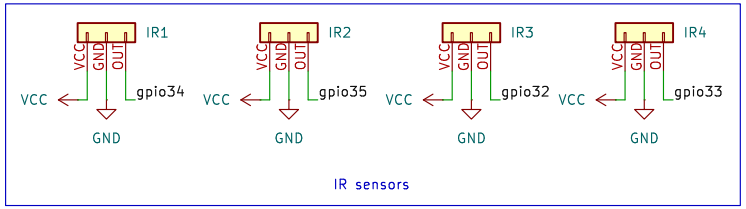

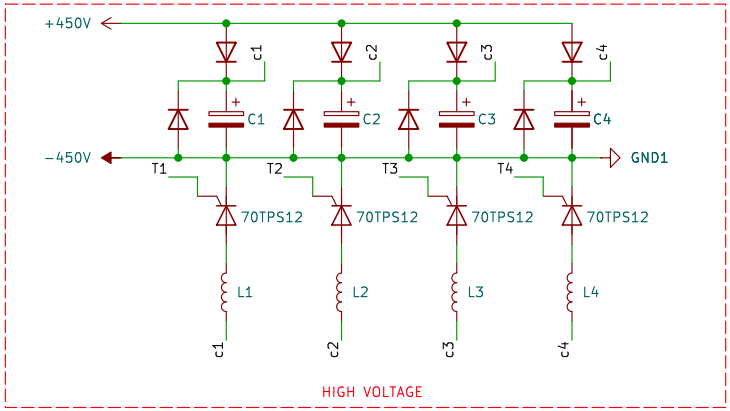

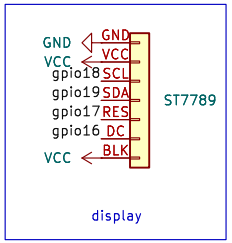

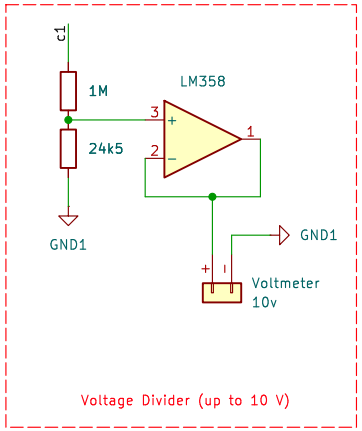

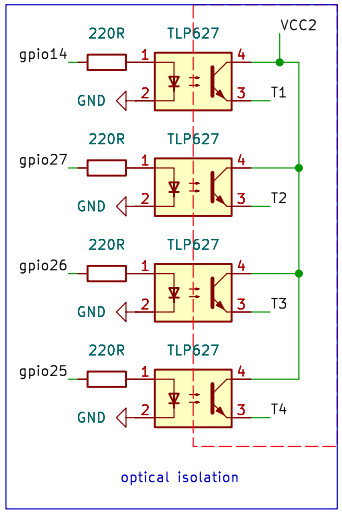

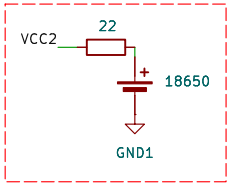

ez
aion-roman

Sheet: /
File: Gauss Gun.kicad_sch

Title: Coil gun

Size: A4	Date: 24.02.2026	Rev:
KiCad E.D.A. 9.0.7		Id: 1/1